# MicroSpec™ MCP-200 Infrared Analyzer

Applied Analytics Data Sheet No. DS-003A

| CO | $CO_2$ | $CH_4$ | $C_2H_4$ | $H_2O$ |
|---|---|---|---|---|

**A rugged, turnkey IR photometric module.**

From the MicroSpec series comes the MCP-200, a concentration monitor for species that absorb IR radiation. This solid state package combines a non-dispersive IR detector and a proprietary optical path design. Engineered to be compact and modular, the MCP-200 excels as both a rugged standalone and an integrated component.

**Features**

- Continuously measures the analyte's chemical concentration in a liquid or gas process stream
- Totally solid state build with no moving parts — modern design for low maintenance
- Compact modular design which reads into any Applied Analytics HMI
- Industry standard I/O (4-20 mA output)
- Decades of field-proven performance in the world's harshest industrial environments

# MicroSpec™ MCP-200 Infrared Analyzer

Applied Analytics Data Sheet No. DS-003A

All performance specifications are subject to the assumption that the sample conditioning system and unit installation are approved by Applied Analytics. For any other arrangement, please inquire directly with Sales.

Subject to modifications. Specified product characteristics and technical data do not serve as guarantee declarations.

| Technical Data | |
|---|---|
| **General** | |
| Measurement Principle | Non-dispersive IR photometry (2 to 10 micron) |
| Light Source | Tungsten black body source |
| Sample Medium | Gas or liquid |
| Sample Introduction | Continuous flow from positive pressure stream |
| Sample Conditioning | Custom design if necessary |
| Analyzer Calibration | If possible, analyzer is factory calibrated with certified calibration fluids; no re-calibration required after initial calibration; measurement normalized by Auto Zero |
| Reading Verification | Simple verification with samples |
| Human Machine Interface | Applied Analytics standard HMI: industrial controller with touch-screen LCD display<br>Data sheet: http://www.a-a-inc.com/documents/AA_DS202A_HMI.pdf |
| User Interface | ECLIPSE™ Runtime Software<br>Data sheet: http://www.a-a-inc.com/documents/AA_DS203A_Eclipse.pdf |
| Data Storage | 16GB Solid State Drive<br>Data sheet: http://www.a-a-inc.com/documents/AA_DS204A_SSD.pdf |
| Enclosure | Standard: wall-mounted, carbon steel NEMA 4 enclosure<br>Options in data sheet: http://www.a-a-inc.com/documents/AA_DS401X_Enclosures.pdf |
| **Measuring Parameters** | |
| Repeatabilty | ±2% full scale |
| Accuracy | ±2% full scale |
| Stability | ±2% full scale / 24 hours |
| Warm-Up Time | 2 minutes |
| **Sample Conditions** | |
| Sample Temperature | -20 to 50 °C (-4 to 122 °F) |
| Sample Pressure (max) | 500 psi |
| **Ambient Conditions** | |
| Analyzer Environment | Indoor/Outdoor (no shelter required) |
| Ambient Temperature | Standard: -20 to 50 °C (-4 to 122 °F)<br>*To avoid radiational heating, use of a sunshade is recommended for systems installed in direct sunlight.* |
| **Physical Specifications** | |
| Dimensions | Diameter: 3.75“ diameter<br>Length: between 7” and 17” (application-dependent) |
| Weight | 10-30 lbs. depending on path length |
| Process Connections | 1/4” tube fittings |
| Wetted Materials | Standard: K7 glass, Viton, stainless steel 316L<br>*Various custom materials available — please inquire.* |
| **Utility Requirements** | |
| Electrical Requirements | 5 VDC, 24 VDC controller |
| Power Consumption | 7 watts (maximum) |

| Outputs/Communication | |
|---|---|
| Communication | Serial communication with Applied Analytics HMI<br>*The HMI provides 1x galvanically isolated 4-20mA output per MCP-200.* |
| I/O Electronics | Voltage/Current Interface Module (i.e. I/O Board)<br>Data sheet: http://www.a-a-inc.com/documents/AA_DS205A_VCIM.pdf |

**MCP-200 Mounting Dimensions**

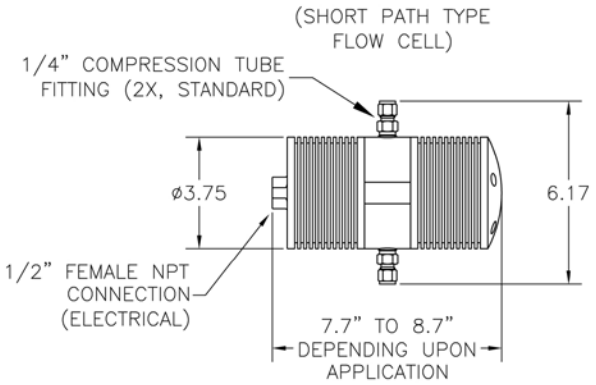


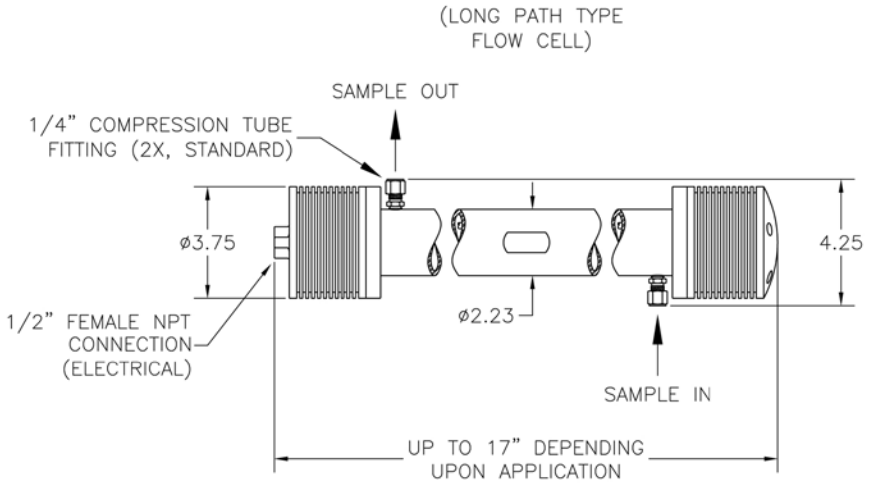


NOTE: ALL FLOW CELLS HAVE TWO 1/4"–20 X .30" DEEP
MOUNTING HOLES LOCATED ON THE BACK SIDE

is a registered trademark of Applied Analytics Group BV. | www.a-a-inc.com

**Headquarters + Manufacturing**
Applied Analytics, Inc.
Burlington, MA | sales@a-a-inc.com

**Asia Pacific Sales**
Applied Analytics Asia Pte. Ltd.
Singapore | sales@appliedanalytics.com.sg

**India Sales**
Applied Analytics (India) Pte. Ltd.
Mumbai, India | sales@appliedanalytics.in

**North America Sales**
Applied Analytics North America, Ltd.
Houston, TX | sales@appliedanalytics.us

**Middle East Sales**
Applied Analytics Middle East (FZE)
Sharjah, UAE | sales@appliedanalytics.ae

**Europe Sales**
Applied Analytics Europe, SpA
Milan, Italy | sales@appliedanalytics.eu

**Brazil Sales**
Applied Analytics do Brasil
Rio de Janeiro, Brazil | sales@aadbl.com.br

© 2013 Applied Analytics Group BV. Products or references stated may be trademarks or registered trademarks of their respective owners. All rights reserved.
We reserve the right to make technical changes or modify this document without prior notice. Regarding purchase orders, agreed-upon details shall prevail.