Monitoring Catalyst Presulfiding Step

Applied Analytics Application Note No. AN-015

Application Summary

Analytes: H_2S (hydrogen sulfide), sulfiding agent

Detector: OMA-300 H_2S Analyzer

Process Stream: reactor effluent gas

Introduction

Catalyst 'presulfiding'is a practice which reduces the extent of early catalyst deactivation by preventing coking (carbon deposits). The procedure involves passing a gas stream containing e.g. H_2S over the catalyst or into the reaction feedstock.

In order to generate the H_2S which will interact with the catalyst, a sulfur carrying agent (e.g. dimethyl sulfide) is injected into the stream. Under high temperature and catalytic reaction, the agent decomposes and releases its sulfur component, forming H_2S. The H_2S reacts with the catalyst's metallic surface to substitute sulfur atoms for oxygen atoms.

The importance of presulfiding is clear, yet the procedure needs to be actively regulated in order to reduce costs and downtime. For example, the presulfiding procedure normally takes 10-36 hours, but can be reduced if presulfiding is terminated as soon as the catalyst is properly sulfided; this can be easily verified by measuring H2S concentration in the stream after the reactor (if H2S concentration does not drop when injection is ceased, presulfiding is complete).

The OMA-300 Process Analyzer monitors H_2S and additional analytes at specific sampling points which are critical to the optimization of presulfiding. Measuring real-time H_2S levels downstream from the reactor validates the completion of presulfiding; additional measurements include low level H_2S after the dryer system and continuous measurement of sulfiding agent concentration in order to detect fluctuations due to outages.

OMA Benefits

- Continuously measures H_2S concentration using dispersive UV-Vis absorbance spectrophotometer
- Totally solid state build with no moving parts — modern design for low maintenance
- Easily multiplexed to analyze sample streams from multiple sampling points simultaneously
- Decades of field-proven performance in various catalytic processes, e.g. propane dehydrogenation

Presulfiding Analysis Applications

The schematic below illustrates the example of a propane dehydrogenation process, identifying key analysis applications for optimization of the presulfiding step:

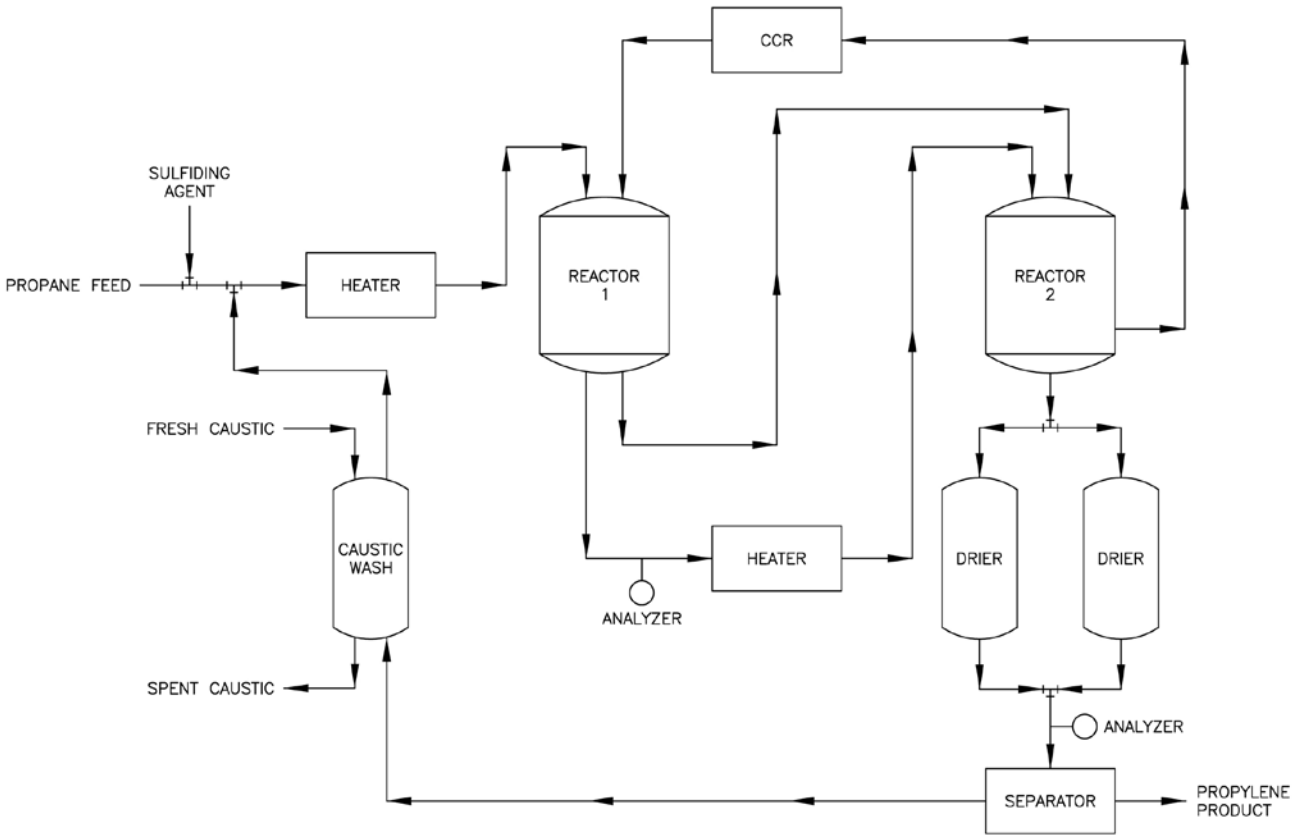

The analyzer sampling from the stream after REACTOR 1 serves to validate the presulfiding procedure in real time. Continuous analysis at this point allows the OMA to quickly recognize the completion state and alert the control system so that no superfluous time or resources are dedicated to presulfiding.

The analyzer sampling from the stream after the dual dryer system serves to verify scrubbing efficiency and ensure that no H_2S is contaminating the propylene product or the recycle stream.

Additional analysis points can be implements in the sulfiding agent stream to continuously watch for outages or problematic fluctuations that will prevent healthy catalyst operation.

H_2S Absorbance Curve

Any single photodiode measurement is vulnerable to noise, signal saturation, or unexpected interference. This susceptibility to error makes a lone photodiode data point an unreliable indicator of one chemical's absorbance.

As accepted in the lab community for decades, the best way to neutralize this type of error is to use collateral data in the form of 'confirmation wavelengths,' i.e. many data points at many wavelengths instead of a single wavelength:

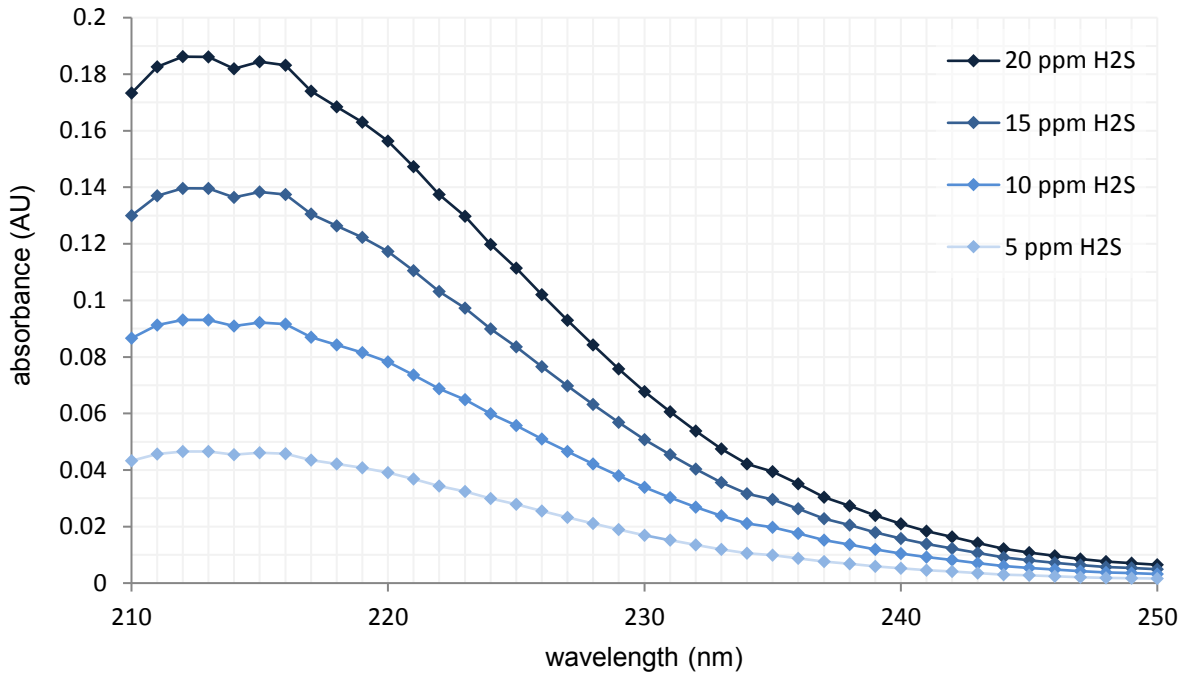

In the figures above, each diamond represents a single photodiode and data point. The nova II registers absorbance at each integer wavelength within the 200-240 nm measurement range and produces an H_2S absorbance curve. After being calibrated on a full spectrum of pure H_2S, the OMA knows the absorbance-concentration correlation for each measurement wavelength; the system can average the modeled concentration value from each wavelength to completely eradicate the effect of noise at any single photodiode.

The OMA visualizes the H_2S absorbance curve in this manner and knows the expected relation of each data point to the others in terms of the curve's structure. This curve analysis enables the OMA to automatically detect erroneous results at specific wavelengths, such as when a single photodiode is saturated with light. The normal photometer, with a single data point, is completely incapable of internally verifying its measurement.

The specifications below represent performance of the OMA-300 Process Analyzer in a typical presulfiding application.

For technical details about the OMA-300 Process Analyzer, see the data sheet:
http://www.a-a-inc.com/documents/AA_DS001A_OMA300.pdf

All performance specifications are subject to the assumption that the sample conditioning system and unit installation are approved by Applied Analytics. For any other arrangement, please inquire directly with Sales.

Subject to modifications. Specified product characteristics and technical data do not serve as guarantee declarations.

Application Data		
Performance Specifications		
Accuracy	*Custom measurement ranges available; example ranges below.*	
	H_2S	0-10 ppm (@10 bar): ±0.1 ppm 0-10 ppm (@1 bar): ±1 ppm 0-100 ppm: ±1% full scale or 1 ppm* 0-10,000 ppm: ±1% full scale 0-100%: ±1% full scale
		*Whichever is larger.

Further Reading

Subject	Location
OMA-300 H2S Analyzer Brochure	http://www.a-a-inc.com/documents/OMAH2S.pdf
OMA-300 Process Analyzer Data sheet	http://www.a-a-inc.com/documents/AA_DS001A_OMA300.pdf
Advantage of Collateral Data Technical Note	http://www.a-a-inc.com/documents/AA_TN-202_CollateralData.pdf
Multi-Component Analysis Technical Note	http://www.a-a-inc.com/documents/AA_TN-203_MultiComponentAnalysis.pdf

APPLIED ANALYTICS™ is a registered trademark of Applied Analytics Group BV. | www.a-a-inc.com

Headquarters + Manufacturing
Applied Analytics, Inc.
Burlington, MA | sales@a-a-inc.com

Asia Pacific Sales
Applied Analytics Asia Pte. Ltd.
Singapore | sales@appliedanalytics.com.sg

India Sales
Applied Analytics (India) Pte. Ltd.
Mumbai, India | sales@appliedanalytics.in

North America Sales
Applied Analytics North America, Ltd.
Houston, TX | sales@appliedanalytics.us

Middle East Sales
Applied Analytics Middle East (FZE)
Sharjah, UAE | sales@appliedanalytics.ae

Europe Sales
Applied Analytics Europe, SpA
Milan, Italy | sales@appliedanalytics.eu

Brazil Sales
Applied Analytics do Brasil
Rio de Janeiro, Brazil | sales@aadbl.com.br

© 2013 Applied Analytics Group BV. Products or references stated may be trademarks or registered trademarks of their respective owners. All rights reserved.
We reserve the right to make technical changes or modify this document without prior notice. Regarding purchase orders, agreed-upon details shall prevail.